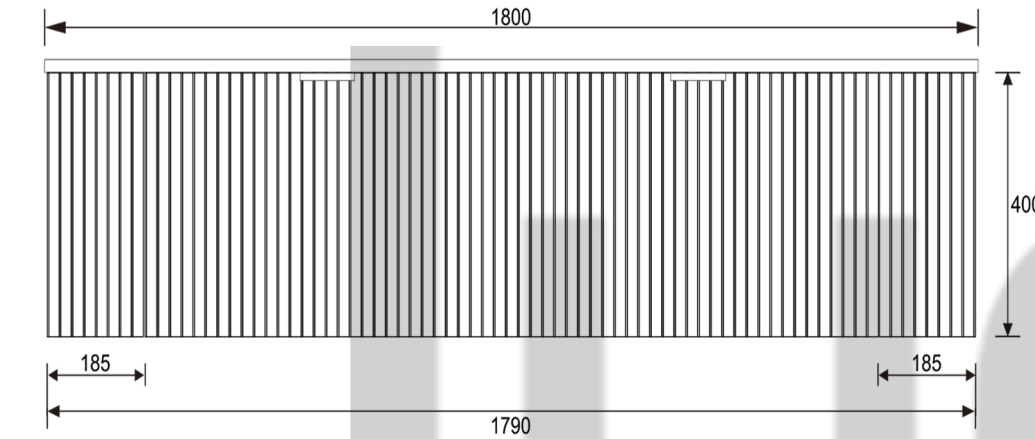

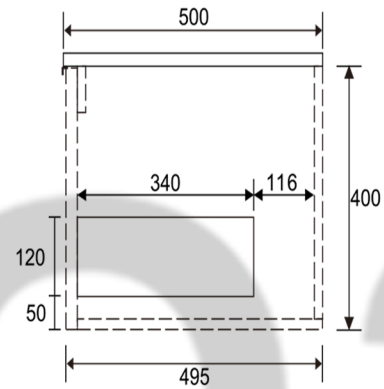

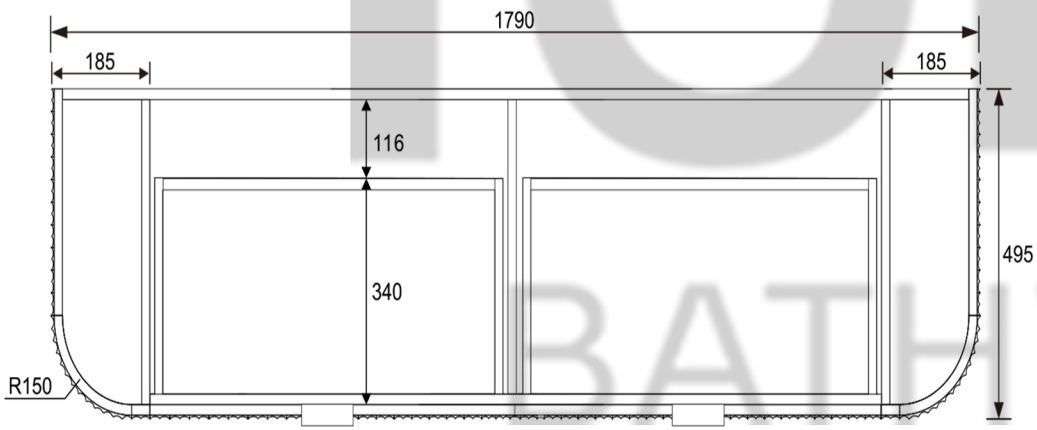

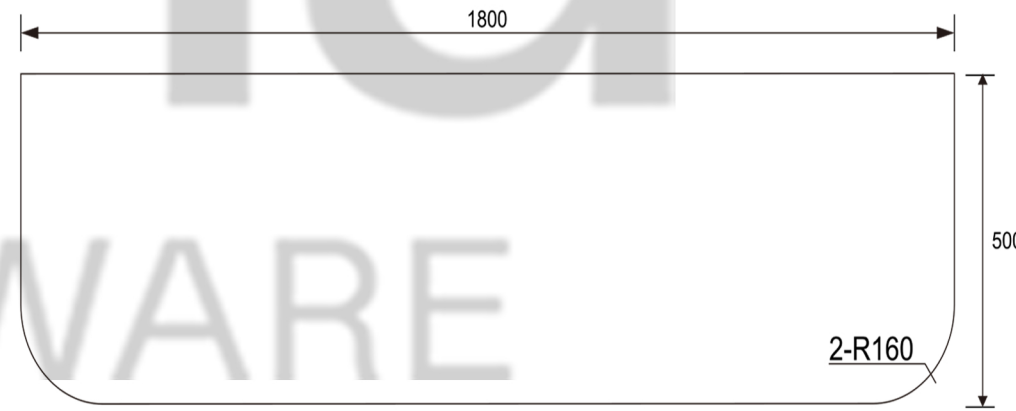

luna BATHWARE

luna BATHWARE

PRODUCT:	LUNA VANITY V-GROOVE 900MM
SIZE:	890MM (W) x 495MM (D) x 400MM (H)
CONFIGURATION:	WALL HUNG
SKU:	VGR900-AO

DRAWERS:	3 DRAWER UNIT
COUNTERTOP:	15MM BLANCO STONE STONE TOP SUPPLIED WITH NO CUT-OUTS

NOTES:

DIMENSIONS ARE NOMINAL. DO NOT DRILL OR ROUGH IN UNTIL YOU HAVE RECIEVED AND MEASURED YOUR VANITY.
ALL DIMENSIONS ARE IN MILLIMETRES.
NO PLUMBING CUT-OUTS IN VANITY OR STONE TOP. PLUMBING CUT-OUTS TO BE COMPLETED BY QUALIFIED TRADESPERSON.